Formule

Elektrina in električni tok

$$i = \frac{\Delta Q}{\Delta t}$$

$$J = \frac{I}{A}$$

Magnetno polje

$$\mu_0 = 4\pi \cdot 10^{-7}$$

$$H = \frac{\Theta}{l}$$

$$\Theta = I \cdot N$$

$$F_\mathrm{m} = B \cdot I \cdot l$$

$$B = \mu_\mathrm{r} \cdot \mu_0 \cdot H$$

$$\Phi = B \cdot A$$

Elektromagnetna indukcija

$$U_\mathrm{i} = B \cdot v \cdot l = -N \frac{\Delta \Phi}{\Delta t} = -L \frac{\Delta i}{\Delta t}$$

$$L = \mu_\mathrm{r} \cdot \mu_0 \cdot \frac{N^2 \cdot A}{l}$$

Električno polje

$$\varepsilon_0 = 8{,}85 \cdot 10^{-12}$$

$$C = \frac{Q}{U}$$

$$W_\mathrm{e} = \frac{Q \cdot U}{2} = \frac{C \cdot U^2}{2} = \frac{Q^2}{2 \cdot C}$$

$$E = \frac{U}{d}$$

$$F = Q \cdot E$$

$$C = \varepsilon_\mathrm{r} \cdot \varepsilon_0 \cdot \frac{A}{d}$$

$$D = \varepsilon_\mathrm{r} \cdot \varepsilon_0 \cdot E$$

Enosmerna vezja

$$R = \frac{U}{I}$$

$$R = \rho \cdot \frac{l}{A}$$

$$R = R_{20} \cdot (1 + \alpha \cdot \Delta T)$$

$$P = U \cdot I = \frac{U^2}{R} = I^2 \cdot R$$

$$W_\mathrm{e} = P \cdot t = U \cdot I \cdot t$$

$$\eta = \frac{P_\mathrm{izh}}{P_\mathrm{vh}} = \frac{W_\mathrm{izh}}{W_\mathrm{vh}}$$

Enostavni izmenični tokokrog

$$\varphi = \alpha_u - \alpha_i$$

$$\omega = 2\pi \cdot f$$

$$u = U_\mathrm{m} \cdot \sin(\omega \cdot t \pm \alpha_u)$$

$$U = \frac{U_\mathrm{m}}{\sqrt{2}}$$

$$P = U_R \cdot I_R = \frac{{U_R}^2}{R} = {I_R}^2 \cdot R$$

$$Q_L = U_L \cdot I_L$$

$$Q_C = U_C \cdot I_C$$

$$X_C = \frac{1}{\omega \cdot C}$$

$$X_L = \omega \cdot L$$

Sestavljeni izmenični tokokrog

$$P = S \cdot \cos\varphi$$

$$Q = S \cdot \sin\varphi$$

$$S = U \cdot I = \sqrt{P^2 + (Q_L - Q_C)^2}$$

$$R = Z \cdot \cos\varphi$$

$$X = Z \cdot \sin\varphi$$

Realna tuljava

$$X_L = \omega \cdot L = 2\pi \cdot f \cdot L$$

$$\mathrm{tg}\varphi = \frac{X_L}{R} = \frac{1}{\mathrm{tg}\delta} = Q$$

Realni kondenzator

$$X_C = \frac{1}{\omega \cdot C} = \frac{1}{2\pi \cdot f \cdot C}$$

$$\mathrm{tg}\varphi = \frac{R}{X_C} = \frac{1}{\mathrm{tg}\delta} = Q$$

Zaporedna vezava

$$Z = \sqrt{R^2 + (X_L - X_C)^2}$$

$$\mathrm{tg}\varphi = \frac{X_L - X_C}{R} = \frac{U_L - U_C}{U_R}$$

Resonanca

$$f_0 = \frac{1}{2\pi\sqrt{L \cdot C}}$$

$$B = \frac{f_0}{Q}$$

Vzporedna vezava

$$Y = \sqrt{G^2 + (B_C - B_L)^2}$$

$$\mathrm{tg}\varphi = -\frac{B_C - B_L}{G} = -\frac{I_C - I_L}{I_R}$$

Transformator

$$\frac{U_1}{U_2} = \frac{I_2}{I_1} = \frac{N_1}{N_2}$$

Prehodni pojavi

$$\tau = R \cdot C = \frac{L}{R}$$

$$t_{pp} = 5\tau$$

$$u_c = U \cdot \left(1 - e^{-t/\tau}\right)$$

$$u_c = U \cdot e^{-t/\tau}$$

$$i_L = \frac{U}{R} \cdot \left(1 - e^{-t/\tau}\right)$$

$$i_L = I \cdot e^{-t/\tau} = \frac{U}{R} \cdot e^{-t/\tau}$$

Digitalna tehnika

$$X + 1 = 1$$
$$X + X = X$$
$$X \cdot X = X$$
$$\overline{\overline{X}} = X$$
$$X \cdot 0 = 0$$
$$X + XY = X$$
$$X \cdot \left(X + Y\right) = X$$
$$\left(X + \overline{Y}\right) \cdot Y = XY$$
$$X \cdot \overline{Y} + Y = X + Y$$
$$\left(X + Y\right) + \overline{X} = 1$$
$$\left(\overline{X} + \overline{Y}\right) \cdot X = 0$$
$$\overline{X + Y} = \overline{X} \cdot \overline{Y}$$
$$\overline{X \cdot Y} = \overline{X} + \overline{Y}$$
$$X_{LSB} = \frac{x_{max} - x_{min}}{2^n}$$
$$x_{digit} = \frac{U_{analog}}{U_{LSB}}$$

Elektronska vezja

Usmernik

$$U_{sr} = \frac{U_m}{\pi} \rightarrow U_{sr} = U_m - \frac{I_{sr}}{2f \cdot C}$$

$$U_{sr} = \frac{2U_m}{\pi} \rightarrow U_{sr} = U_m - \frac{I_{sr}}{4f \cdot C}$$

Tranzistor

$$I_C = -\alpha \cdot I_E = \beta \cdot I_B$$

$$\beta = \frac{\alpha}{1 - \alpha}$$

$$I_E + I_B + I_C = 0$$

Operacijski ojačevalnik

invertirajoči

$$A = -\frac{R_p}{R_v}$$

R_p – upor v povratni zanki

R_v – upor na invertirajočem vhodu

neinvertirajoči

$$A = 1 + \frac{R_p}{R_v}$$

Presek vodnikov in moč bremen

$$A = \frac{200 \cdot l \cdot I}{\lambda \cdot \Delta u\% \cdot U_f} = \frac{200 \cdot l \cdot P}{\lambda \cdot \Delta u\% \cdot U_f^2}$$

$$A = \frac{200 \cdot l \cdot I \cdot \cos\varphi}{\lambda \cdot \Delta u\% \cdot U_f} = \frac{200 \cdot l \cdot P}{\lambda \cdot \Delta u\% \cdot U_f^2}$$

$$A = \frac{100 \cdot l \cdot I \cdot \sqrt{3}}{\lambda \cdot \Delta u\% \cdot U} = \frac{100 \cdot l \cdot P}{\lambda \cdot \Delta u\% \cdot U^2}\left(\text{mm}^2\right)$$

$$A = \frac{100 \cdot l \cdot I \cdot \cos\varphi \cdot \sqrt{3}}{\lambda \cdot \Delta u\% \cdot U} = \frac{100 \cdot l \cdot P}{\lambda \cdot \Delta u\% \cdot U^2}$$

$$I_{ks}^2 \cdot t \leq \left(k_{cu} \cdot A\right)^2 \quad J = \frac{I}{A}$$

$$A = \frac{200}{\lambda \cdot \Delta u\% \cdot U^2} \cdot \sum\left(P_i \cdot l_i\right)$$

$$R = \frac{\rho \cdot l}{A}$$

$$\Delta U = \frac{2 \cdot l \cdot I}{\lambda \cdot A}\left(\text{V}\right)$$

Elektromotorni pogon

$$P = U \cdot I$$

$$P_{el.mot} = \sqrt{3} \cdot U \cdot I \cos\varphi$$

$$I_{ZY} = \frac{1}{3} \cdot I_{Z\Delta}$$

$$M_{ZY} = \frac{1}{3} \cdot M_{Z\Delta}$$

$$R_{vodnika} = \frac{p \cdot l}{A}$$

$$U_2 = \frac{N_2}{N_1} \cdot U_1$$

$$U_{max} = U_{ef} \cdot \sqrt{2}$$

$$Q = P \cdot \tan\varphi$$

$$S = \frac{P}{\cos\varphi}$$

$$M = \frac{P_{meh} \cdot 30}{\pi \cdot n}$$

$$n_s = \frac{f \cdot 60}{p}$$

$$p = \frac{f \cdot 60}{n_s}$$

$$s = \frac{n_s - n}{n_s} \cdot 100\ \%$$

Regulacije

$K_p = \frac{y_o}{x_o}$

PT_1 – člen (odziv sistema)

$X_{izh} = K_p \cdot \left(1 - e^{-\frac{t}{\tau}}\right) \cdot X_{vh}$

X_{vh} – vhodna veličina
X_{izh} – izhodna veličina
K_p – ojačanje sistema
τ – časovna konstanta sistema

I – člen

$X_{izh}(t) = K_I \cdot fx_{vh}(t)dt$

Če je $x_{vh}(t)$ konstantna vrednost, dobimo: $X_{izh} = K_I \cdot x_{vh} \cdot t$

D – člen

$X_{izh}(t) = K_D \cdot \frac{\Delta X_{vh}(t)}{\Delta t}$

PID regulator

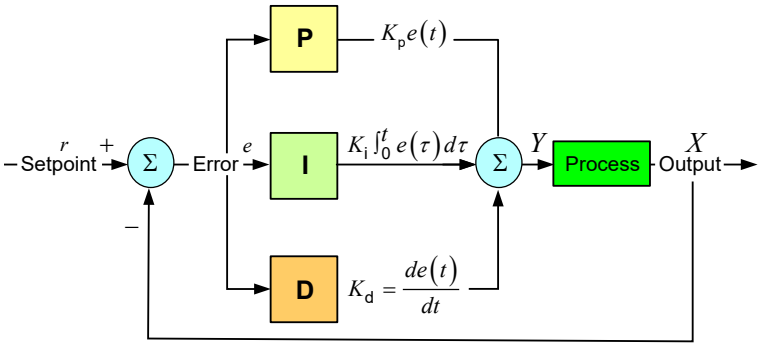

Setpoint (r) – referenčna vrednost
Error (e) – napaka (odstopanje)
Output (X) – regulirana veličina
K_p – ojačanje P regulatorja
K_i – integracijska konstanta $Ti = 1/Ki$
K_d – diferencirna konstanta
Y – izhod regulatorja (regulirana veličina)

$$y(t) = K_p e(t) + K_i \int_0^t e(\tau)d\tau + K_d \frac{de(t)}{dt}$$

$$y = K_p \cdot \left(e + \frac{1}{T_N}\int e\, dt + T_V \cdot \frac{de}{dt}\right)$$

T_N – integralni čas
T_V – diferencirni čas

Digitalni PID regulator (e je v času Δt konstanten)

$Y = K_p \cdot e + K_i \cdot e \cdot \Delta t + K_d \cdot (\Delta e / \Delta t)$

Δt – časovni interval izračuna

ZN – metoda nastavitve parametrov PID regulatorja

Vrsta nadzora	K_p	K_i	K_d
P	0,50 K_u	–	–
PI	0,45 K_u	0,54 K_u/T_u	–
PID	0,60 K_u	0,2 K_u/T_u	3 $K_u T_u/40$

K_u – kritično ojačanje
T_u – perioda nihanja

Ujemi strojnih delov

$$Z_{\text{maks}} = A_{\text{g}} - a_{\text{d}}$$

$$Z_{\text{min}} = A_{\text{d}} - a_{\text{g}}$$

Toleranca

$$d_{\text{g}} = d + a_{\text{g}}$$

$$d_{\text{d}} = d + a_{\text{d}}$$

$$T = a_{\text{g}} - a_{\text{d}}$$

$$D_{\text{g}} = D + A_{\text{g}}$$

$$D_{\text{d}} = D + A_{\text{d}}$$

$$T = A_{\text{g}} - A_{\text{d}}$$

Preračun ležajev

$$L_{\text{h}} = \frac{10^6}{60 \cdot n} \cdot \left(\frac{C^3}{F^3} \right)$$

Delo, moč, izkoristek

$$\eta = \frac{P_{\text{k}}}{P_{\text{el}}}$$

$$P = m \cdot g \cdot v$$

$$P = \frac{m \cdot g \cdot h}{t}$$

$$v = \frac{\pi \cdot D \cdot n}{t}$$

$$P = T \cdot \varpi$$

$$T = F \cdot \frac{d}{2}$$

$$\varpi = \frac{\pi \cdot n}{30}$$

$$P = F \cdot v$$

$$P = \frac{A}{t}$$

$$A = F \cdot s$$

$$A = m \cdot g \cdot h$$

Hitrost pri obdelavi

$$v_{\text{c}} = \pi \cdot d \cdot n$$

$$v_{\text{f}} = f \cdot n$$

$$f = f_{\text{z}} \cdot z$$

Pnevmatika in hidravlika

$$A = \frac{F}{p_e \cdot \eta}$$

$$d = \sqrt{\frac{4 \cdot A}{\pi}}$$

$$Q_v = A \cdot s \cdot n \cdot \frac{p_e + p_{okol}}{p_{okol}}$$

$$P = \frac{p_e \cdot Q_v}{\eta}$$

$$P_{mot} = \frac{Q \cdot p}{600}$$

$$P_{črp} = P_{vh} \cdot \eta_{mot} \cdot \eta_{črp}$$

$$Q = V_v \cdot n \cdot \eta_v$$

$$Q = \frac{P_{črp}}{p_e}$$

$$Q_v = A \cdot v = \frac{\pi \cdot D^2}{4} \cdot v$$

$$\eta = \frac{P_{izh}}{P_{vh}} \rightarrow P_{črp} = P_{vh} \cdot \eta_{mot} \cdot \eta_{črp}$$

Robotika in kinematika

$$d^2 = a^2 + b^2 - 2ab\ \cos(\beta)$$

$$\cos(\beta) = \frac{a^2 + b^2 - x^2 - y^2}{2ab}$$

$$K2 = \arctan\left(\frac{y}{x}\right)$$

$$K1 = \arccos\left(\frac{a^2 + x^2 + y^2 - b^2}{2a\sqrt{x^2 + y^2}}\right)$$

Napetost v elementu

$$\sigma = \frac{F_N}{A_N}$$

$$p = \frac{F}{A}$$

$$\tau = \frac{F_S}{A_S}$$

Prečni zatič (pesto in gred)

$$\tau = \frac{F}{2 \cdot A} \leq \tau_{dop}$$

$$A = \frac{\pi \cdot d^2}{4}, \quad F = \frac{2 \cdot T}{D}$$

$$p_n = \frac{6 \cdot T}{D^2 \cdot d} \leq p_{dop}$$

$$p_z = \frac{4 \cdot T}{d \cdot \left(D_z^2 - D^2\right)} \leq p_{dop}$$

$$\tau_s = \frac{4 \cdot T}{D \cdot \pi \cdot d^2} \leq \tau_{sdop}$$

Vzdolžni zatič

$$p = \frac{F}{A_p} \leq p_{dop}$$

$$A_p = \frac{n \cdot l \cdot d}{2}$$

n … število zatičev, D … premer gredi

$$\tau_s = \frac{F}{A_s} \leq \tau_{sdop}$$

$$A_s = n \cdot d \cdot l$$

$$F = \frac{2 \cdot T}{D}$$

Vijačne zveze

Sile na navoju

$$F_t = F \cdot \tan(\gamma \pm \rho)$$

$$\tan\gamma = \frac{P}{\pi \cdot d_2}$$

$$\tan\rho = \frac{\mu}{\cos\frac{\alpha}{2}}$$

$$T = F_t \cdot \frac{d_2}{2}$$

Prednapeti vijak

$$A = \frac{\sqrt{2} \cdot F}{\sigma_{dop}}$$

$$\sigma_{dop} = \frac{R_{p0,2}}{\nu}$$

$$\sigma_p = \sqrt{\sigma^2 + 3 \cdot (\alpha_0 \cdot \tau)^2}$$

$$\sigma = \frac{F}{A}, \quad A = \frac{\pi \cdot d_1^2}{4}$$

$$\tau = \frac{T}{W_t}, \quad W_t = \frac{\pi \cdot d_1^3}{16}$$

$$p = \frac{F}{z \cdot A_p} \leq p_{dop}$$

$$A_p = \frac{\pi}{4} \cdot \left(d^2 - D_1^2\right)$$

$$H = z \cdot P$$

Vijak brez prednapetja

$$\sigma = \frac{F}{A} \leq \sigma_{dop}$$

$$A = \frac{\pi \cdot d_1^2}{4}$$

$$\sigma_{dop} = \frac{R_{p0,2}}{\nu}$$

$$p = \frac{F}{z \cdot A_p} \leq p_{dop}$$

$$A_p = \frac{\pi}{4} \cdot \left(d^2 - D_1^2\right)$$

$$H = z \cdot P$$

Prečno obremenjen vijak

$$\tau = \frac{F}{A} \leq \tau_{dop}$$

$$A = \frac{\pi \cdot D_1^2}{4}$$

$$\tau_{dop} = \frac{R_{p0,2}}{\nu}$$

$$p = \frac{F}{A_d} \leq p_{dop}$$

$$A_d = s \cdot D_1$$

Privijanje vijaka

$$W = F_1 \cdot 2\pi \cdot r$$

$$W = F_2 \cdot P$$

Zveze s sorniki

$$\sigma = \frac{M_{\text{maks}}}{W_z} \leq \sigma_{\text{dop}}$$

$$M_{\text{maks}} = \frac{F}{4} \cdot \left(a + \frac{b}{2}\right)$$

$$W_z = \frac{\pi \cdot d^3}{32}$$

$$\tau = \frac{F}{2 \cdot A} \leq \tau_{\text{dop}}$$

$$A = \frac{\pi \cdot d^2}{4}$$

$$p_d = \frac{F}{A_d} \leq p_{\text{dop}}$$

$$A_d = d \cdot b$$

$$p_V = \frac{F}{A_V} \leq p_{\text{dop}}$$

$$A_V = 2 \cdot d \cdot a$$

Zveza z zagozdo

$$p = \frac{2 \cdot T}{d \cdot l^* \cdot t_2 \cdot i} \leq p_{\text{dop}}$$

Zveza z mozniki

$$p = \frac{k \cdot 2 \cdot T}{d \cdot l^* \cdot (h - t_1) \cdot i} \leq p_{\text{dop}}$$

$k = 1$, če je $i = 1$

$k = 1{,}35$, če je $i > 1$

Osi in gredi

$$d = \sqrt[3]{\frac{32 \cdot M_{\text{maks}}}{\pi \cdot \sigma_{\text{dop}}}}$$

$$d = \sqrt[3]{\frac{16 \cdot T}{\pi \cdot \tau_{\text{dop}}}}$$

$$T = \frac{P}{\omega} = 9{,}55 \cdot \frac{P}{n}$$

Kovice

$$\tau = \frac{F}{A_1 \cdot m \cdot n} \leq \tau_{\text{sdop}}$$

$$A_1 = \frac{\pi \cdot d_1^2}{4}$$

$$p = \frac{F}{d_1 \cdot s \cdot n} \leq p_{\text{dop}}$$

Temperaturno raztezanje

$$\Delta l = l \cdot \alpha \cdot \Delta T$$

$$\Delta T = T_2 - T_1$$

$$l_1 = l \cdot (1 + \alpha \cdot \Delta T)$$

$$\Delta V = V \cdot \beta \cdot \Delta T$$

$$V_1 = V \cdot (1 + \beta \cdot \Delta T)$$

$$\beta = 3 \cdot \alpha$$

Zobniki

$$m = \frac{p}{\pi}$$

$$d_0 = z \cdot m$$

$$d_{\text{f}} = d_0 - 2{,}4 \text{ m}$$

$$d_{\text{k}} = d_0 - 2 \text{ m}$$

Gonila (jermenska, zobniška, verižna, sestavljena)

$$a = \frac{d_1 + d_2}{2}$$

$$i = \frac{n_1}{n_2} = \frac{d_2}{d_1} = \frac{z_2}{z_1} = \frac{M_2}{M_1}$$

$$M_1 = \frac{30 \cdot P_1}{\pi \cdot n_1}$$

$$M_2 = \frac{30 \cdot P_2}{\pi \cdot n_2}$$

$$\eta = \frac{P_2}{P_1}$$

$$P_2 = \eta \cdot P_1$$

$$i_{\text{cel}} = i_{12} \cdot i_{34} \cdot \ldots$$

$$i_{\text{cel}} = \frac{n_{\text{vhod}}}{n_{\text{izhod}}}$$

Elastične deformacije, Hookov zakon

$$\sigma = E \cdot \varepsilon = \frac{F}{A}$$

$$\varepsilon = \frac{\Delta l}{l_0}$$

$$\Delta l = l - l_0$$